MOUNTING DIRECTIONS

There are four possible mounting configurations depending upon space constraints.
Attention ! Over the size of the radius R (see detail X) can be adjusted the resistance to mount and remount the fan with sleeves.

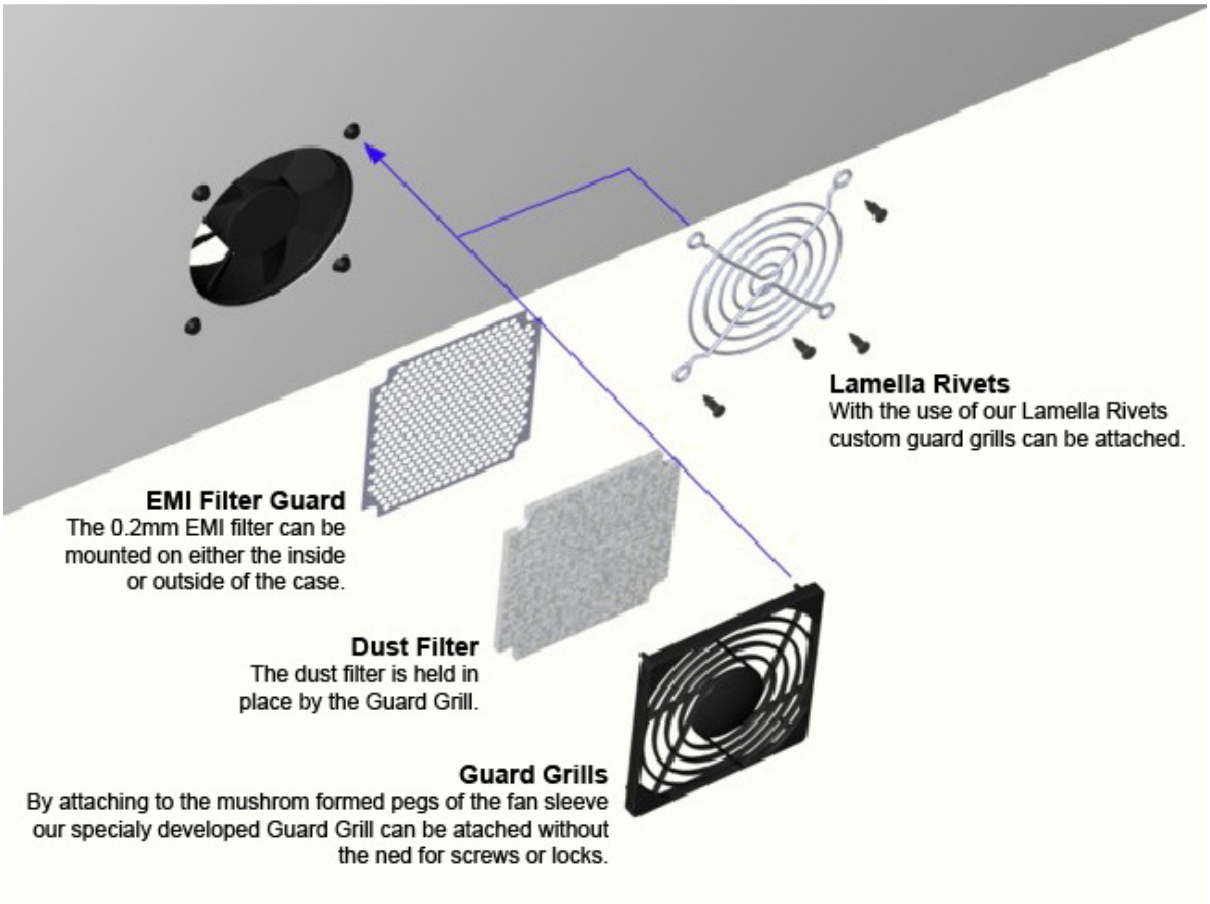

Gelmec UK
Marcom House, 1-2 Steam Mill Lane, Great Yarmouth, Norfolk, NR31 0HP
Telephone: +44(0) 1493 668622 **Fax:** +44(0) 1493 668623
Email: sales@gelmec.co.uk **Website:** www.gelmec.co.uk

MOUNTING DIRECTIONS

Recommended hole cut-outs / measures for mounting plates and housing walls.

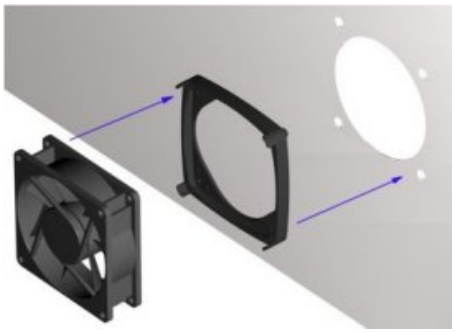

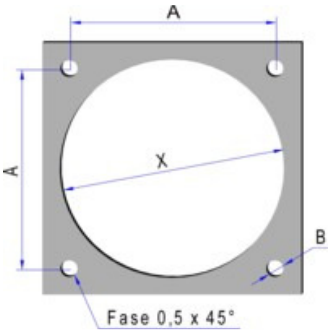

Hole Cut Out 1

First pull the sleeve over the flange of the fan, then place the four mushroom shaped pegs over the holes **B** and then push through the mounting plate (a little lubricant would assist).

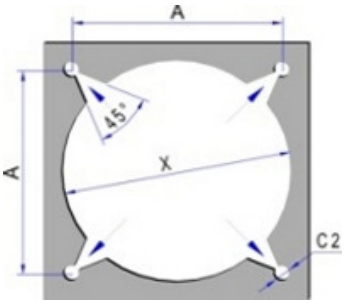

Hole Cut Out 2

First place the four mushroom shaped pegs through the 45° slots of the mounting plate and push into the holes **C2.** Now put the fan into the sleeve and pull the corners over the fan flanges.

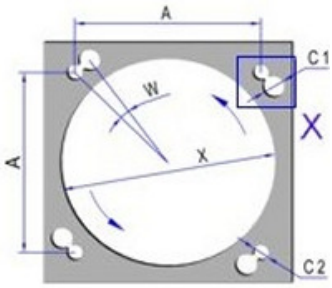

Hole Cut Out 3

First pull the sleeve over the fan flange. Then place the four mushroom shaped pegs through the larger holes **C1** of the mounting plate and rotate the fan to lock into holes **C2**.

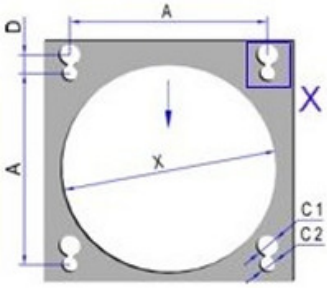

Hole Cut Out 4

First pull the sleeve over the fan flange, then place the four mushroom shaped pegs through the lager holes **C1** of the mounting plate and slide the fan to lock into the holes **C2**.

Dim mm	A	B	C1	C2	D	R	W	X
for LM-40...	32	5.0	6.5	4.5	5.75	0.5 ~ 1.0	14.5	Form / dim. Dependent on fan manufacturer.
for LM-60...	50	5.5	7.5	5.0	6.5	0.5 ~ 1.0	10.5	Form / dim. Dependent on fan manufacturer.
for LM-80...	71.5	6.5	8.0	6.0	7.25	0.5 ~ 1.0	8	Form / dim. Dependent on fan manufacturer.
for LM-92	82.5	6.5	8.5	6.0	7.5	0.5 ~ 1.0	7	Form / dim. Dependent on fan manufacturer.
for LM-119	105	8.5	11.0	8.0	9.5	1.0 ~ 2.0	7	Form / dim. Dependent on fan manufacturer.

Gelmec UK
Marcom House, 1-2 Steam Mill Lane, Great Yarmouth, Norfolk, NR31 0HP
Telephone: +44(0) 1493 668622 **Fax:** +44(0) 1493 668623
Email: sales@gelmec.co.uk **Website:** www.gelmec.co.uk